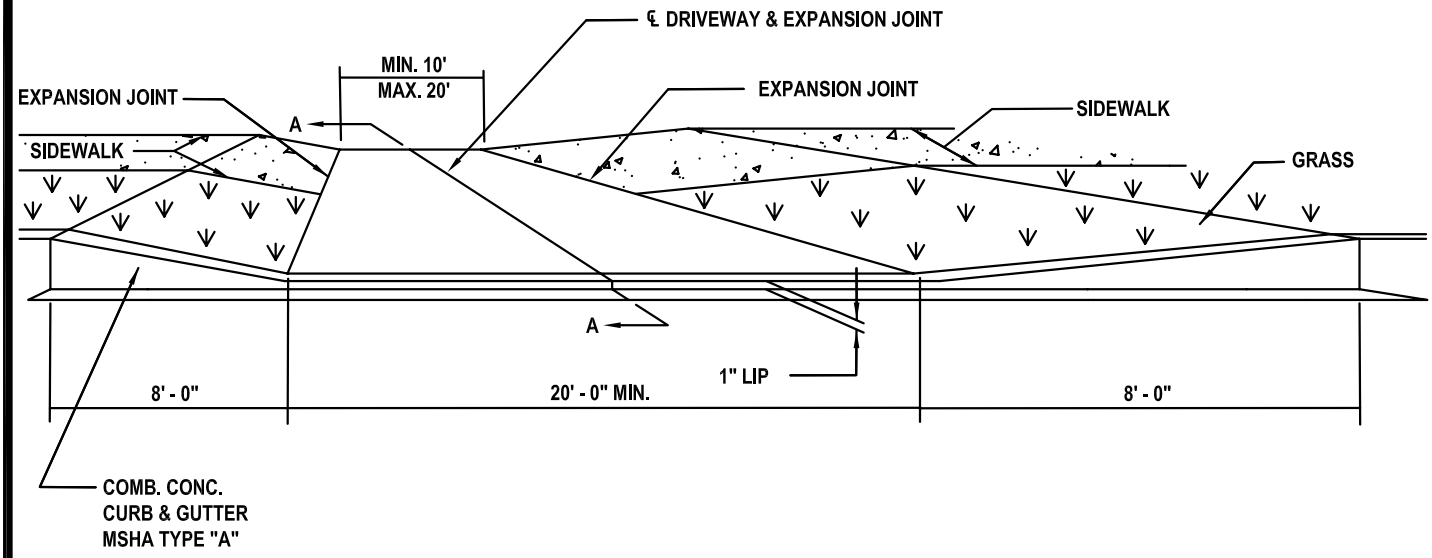

PERSPECTIVE VIEW

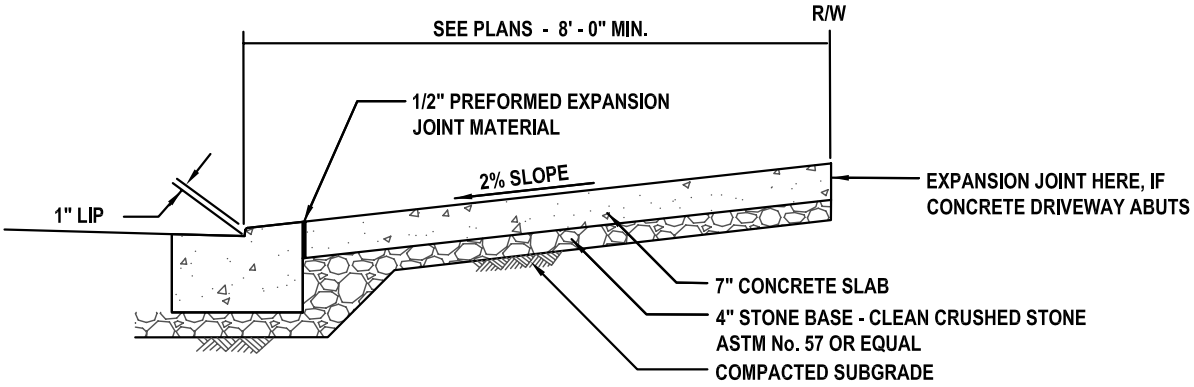

SECTION A-A

CONSTRUCTION NOTES:

1. Strike control joints every 4'-0" and place expansion joints every 16'-0".
2. Install 1/2" preformed expansion joint material at all expansion joints and where sidewalk abuts concrete curb, foundations, aprons, or other concrete structures.
3. All concrete construction shown on these standard details shall use 3000 P.S.I. SHA Mix No. 2 concrete unless otherwise specified.
4. All storm drain structures shall be underlain with a minimum 6" clean crushed stone base.

APPROVED:

DIRECTOR DATE

No.	REVISIONS	DATE

CITY OF WESTMINSTER
DEPARTMENT OF PUBLIC WORKS
STANDARDS FOR SIDEWALK & ENTRANCE CONTRUCTION

NEW RESIDENTIAL CONCRETE DRIVEWAY APRON

Z:\State of Maryland\Carroll County\City of Westminster\DETAILS\SIDEWALK\rehab\City of Westminster Details.dwg, Layout4, 2/29/2008 9:46:06 AM, brian jenkins, 1:1